Work Order ID 65497

January 19, 2011 8:17:20 AM

Item ID: D4184-5 **Accept** **Setup Start**
Revision ID: PRELIM **Stop**
Item Name: Main Case Base

Start Date: 1/19/11 **Start Qty:** 2.00 **Cust Item ID:**
Required Date: 2/04/11 **Req'd Qty:** 2.00 **Customer:**
Reference:

Run Start
Stop

Approvals: **Process Plan:** CL **Date:** 11/01/19 **Tooling:** _____ **Date:** _____
QC: _____ **Date:** _____ **SPC (Y/N):** _____ **Date:** _____

Sequence ID/ Work Center ID	Operation Description	Set Up/ Run Hours	Tool ID	Tool #	Plan Code	Accept Qty	Reject Qty	Reject Number	Insp. Stamp
Draw Nbr	**Revision Nbr**								
D4184	~~PA1~~ ~~PA3~~ ~~PA5~~ PA8 11.01.28								
100		0.00							
Waterjet	**Memo**	0.00				IB 11-1-20			
FLOW CNC Waterjet. 6061 .178X 4."	CUT AS PER DWG PROG REV: A DWG REV: A DEBURR								2
110	QC2- Inspect parts off machine FAI/FAIB	0.00							
QC Quality Control	**Memo**	0.00				IB 11-1-20			

POSITIVE RECALL

MATERIAL CERTIFICATION REQ'D UPON DELIVERY

PRELIMINARY ISSUE

Dart Aerospace Ltd

W/O:		WORK ORDER CHANGES					
DATE	STEP	PROCEDURE CHANGE	By	Date	Qty	Approval Chief Eng / Prod Mgr	Approval QC Inspector

Part No: _____ **PAR #:** _____ **Fault Category:** _____ **NCR:** Yes No **DQA:** _____ **Date:** _____

Resolution: _____ **Disposition:** _____ **QA: N/C Closed:** _____ **Date:** _____

NCR:		WORK ORDER NON-CONFORMANCE (NCR)						
DATE	STEP	Description of NC Section A	Corrective Action Section B			Verification Section C	Approval Chief Eng	Approval QC Inspector
			Initial Chief Eng	Action Description Chief Eng	Sign & Date			

NOTE: Date & initial all entries

Work Order ID 65497

January 19, 2011 8:17:20 AM

Item ID: D4184-5
Revision ID: PRELIM
Item Name: Main Case Base

Accept

Setup Start
Stop

Start Date: 1/19/11 **Start Qty:** 2.00
Required Date: 2/04/11 **Req'd Qty:** 2.00
Reference:

Cust Item ID:
Customer:

Run Start
Stop

Approvals: **Process Plan:** _____ **Date:** _____ **Tooling:** _____ **Date:** _____
QC: _____ **Date:** _____ **SPC (Y/N):** _____ **Date:** _____

Sequence ID/ Work Center ID	Operation Description	Set Up/ Run Hours	Tool ID	Tool #	Plan Code	Accept Qty	Reject Qty	Reject Number	Insp. Stamp
120		0.00							
Mill Conv	**Memo** N/A 11.01.26	0.00			11/01/26				
Conventional Milling Machine	MILL STEP AND ~~C'SINK~~ AS PER DWG								
130	QC2- Inspect parts off machine FAI/FAIB	0.00							
QC	**Memo**	0.00			11/01/26				
Quality Control									
11.01.26 135	QC8	2			11.01.26				
140	Chemical Conversion Coat per QSI005 4.1	0.00							
HandFinish	**Memo**	0.00				2		11-01-26	
Hand Finishing									

Dart Aerospace Ltd

W/O:		WORK ORDER CHANGES					
DATE	STEP	PROCEDURE CHANGE	By	Date	Qty	Approval Chief Eng / Prod Mgr	Approval QC Inspector

Part No: _____ **PAR #:** _____ **Fault Category:** _____ **NCR:** Yes No **DQA:** _____ **Date:** _____

Resolution: _____ **Disposition:** _____ **QA: N/C Closed:** _____ **Date:** _____

NCR:		WORK ORDER NON-CONFORMANCE (NCR)						
DATE	STEP	Description of NC Section A	Corrective Action Section B			Verification Section C	Approval Chief Eng	Approval QC Inspector
			Initial Chief Eng	Action Description Chief Eng	Sign & Date			

NOTE: Date & initial all entries

H:\FORMS\Quality Assurance\approved QA\NCRWO RevE

Work Order ID 65497

January 19, 2011 8:17:20 AM

Item ID: D4184-5
Revision ID: PRELIM
Item Name: Main Case Base

Accept

Setup Start
Stop

Start Date: 1/19/11 **Start Qty:** 2.00
Required Date: 2/04/11 **Req'd Qty:** 2.00
Reference:

Cust Item ID:
Customer:

Run Start
Stop

Approvals: **Process Plan:** _____ **Date:** _____ **Tooling:** _____ **Date:** _____
QC: _____ **Date:** _____ **SPC (Y/N):** _____ **Date:** _____

Sequence ID/ Work Center ID	Operation Description	Set Up/ Run Hours	Tool ID	Tool #	Plan Code	Accept Qty	Reject Qty	Reject Number	Insp. Stamp
150 QC Quality Control	QC3- Inspect Part Finish	0.00	11/01/26			x2	∅		
	Memo	0.00							
160 Packaging Packaging	Identify as per dwg & Stock Location: Rel. Shelf	0.00	11-03-23			x2	∅		
	Memo	0.00							
170 QC Quality Control	QC21- Final Inspection - Work Order Release	0.00							
	Memo	0.00					CL 11/03/23		

POSITIVE RECALL
EFFECTIVE 11/01/09 AUTH
RELEASED _____ DATE _____

Dart Aerospace Ltd

W/O:		WORK ORDER CHANGES					
DATE	STEP	PROCEDURE CHANGE	By	Date	Qty	Approval Chief Eng / Prod Mgr	Approval QC Inspector

Part No: _____ **PAR #:** _____ **Fault Category:** _____ **NCR:** Yes No **DQA:** _____ **Date:** _____

Resolution: _____ **Disposition:** _____ **QA: N/C Closed:** _____ **Date:** _____

NCR:		WORK ORDER NON-CONFORMANCE (NCR)						
DATE	STEP	Description of NC Section A	Corrective Action Section B			Verification Section C	Approval Chief Eng	Approval QC Inspector
			Initial Chief Eng	Action Description Chief Eng	Sign & Date			

NOTE: Date & initial all entries

H:\FORMS\Quality Assurance\approved QA\NCRWO RevE

Picklist Print

January 19, 2011 8:17:20 AM

Work Order ID: 65497

Parent Item: D4184-5

Parent Item Name: Main Case Base

Start Date: 1/19/11 **Required Date:** 2/04/11

Start Qty: 2.00 **Required Qty:** 2.00

Comments: IPP REV:A NEW ISSUE 10-11-09 JLM VERIFIED BY:EC

Component Item ID/ Item Name	Replacement Item ID	Mfg/ Purch	Bin Item	Primary Location	Last Location	Route Seq ID	Unit of Measure	Qty on Hand	Qty per Kit	Total Qty	Qty Issued	Date Issued	Status
M6061T6B0.187X04.000		Purchased	No			100	f	18.3200	0.583	1.227368			
6061-T6 Bar .178 x 4.00													

JB 1-1-20

Location	Loc Qty	Loc Code
MAT01	18.32	
112999	13.5	
113123	4.82	

112999

2

Dart Aerospace Ltd

W/O:		WORK ORDER CHANGES					
DATE	STEP	PROCEDURE CHANGE	By	Date	Qty	Approval Chief Eng / Prod Mgr	Approval QC Inspector

Part No: _____ **PAR #:** _____ **Fault Category:** _____ **NCR:** Yes No **DQA:** _____ **Date:** _____

Resolution: _____ **Disposition:** _____ **QA: N/C Closed:** _____ **Date:** _____

NCR:		WORK ORDER NON-CONFORMANCE (NCR)						
DATE	STEP	Description of NC Section A	Corrective Action Section B			Verification Section C	Approval Chief Eng	Approval QC Inspector
			Initial Chief Eng	Action Description Chief Eng	Sign & Date			

NOTE: Date & initial all entries

DART AEROSPACE LTD	Work Order:	65497
Description: MAIN CASE BASE	Part Number:	D4184-5
Inspection Dwg: D4184-5 , Rev: PA3 PA8		Page 1 of 1

11.01.28

FIRST ARTICLE INSPECTION CHECKLIST

[X] First Article [X] Prototype

Drawing Dimension	Tolerance	Actual Dimension	Accept	Reject	Method of Inspection	Comments
Ø .209	+.005 -.001	.210	✗		VB V02	
Ø .750	+.009 -.001	.749	✗		V	
6.56	+/- .030	6.563	✗		V	
2.21	+/- .030	2.207	✗		V	
.42	+/- .030	.422	✗		V	
1.33	+/- .030	1.326	✗		V	
.63	+/- .030	.629	✗		V	
.84	+/- .030	.844	✗		V	
4.87	+/- .030	4.866	✗		V	
4.12	+/- .030	4.114	—		V RA26	Vern
1.97	+/- .030	1.968	✗		V	
.99	+/- .030	.991	—		V RA26	Vern
.25	+/- .030	.250	—		V "	
.69	+/- .030	.686	✗		V	
1.66	+/- .030	1.666	✗		V	
.49	+/- .030	.493	✗		V	
2.66	+/- .030	2.663	✗		V	
.19	+/- .030	.183	✗		V	
.030	± .010	.031	—		RA26	Vern

Measured by:	JB	Audited by:		Prototype Approval:	
Date:	11-1-26 11/1/26	Date:		Date:	

Rev	Date	Change	Revised by	Approved
A		New Issue	KJ/JLM	

Receiving Report

Date: 9/10/26

Batch No: M112999

Supplier: MAGNA

Dart P/O: 12312

Packing Slip: Yes ✓ No ___
Invoice: Yes ___ No ✓
Receipt: Cash ___ Cr ___

Release Note Attached: Yes ✓ No ___ N/A ___
Waybill Attached: Yes ___ No ✓
Shipment Complete: Yes ___ No ✓ N/A ___
QC6 Inspection ✓ N/A ___
Work Order ___ N/A ✓

Discrepancies

Part Number	Description	Quantity Ordered	Quantity Received	Quantity Returned	Quantity Short	Comments
M6061T6R0.625		40	0	0	40	
M3045126A		64	0	0	64	

Initials of receiver (if shipment OK) Level 12 ___

Production/Admin: 9/10/26
Date
Received/Costing
Initial

Location ___

H:\FORMS\Purchasing\approved purch\RECREPORT Rev D

MAGNA INOXYDABLE

Magna Stainless
5775 Kieran St, Saint-Laurent QC H4S 0A3
Phone: (514) 339-1211 Watts: 1-800-363-6646 Fax: (514) 339-1105

INVOICE

 I018465

RECEIVED
OCT 30 2009

SOLD TO:

DART AEROSPACE LTD
1270 ABERDEEN STREET
HAWKESBURY , ON
K6A 1K7

SHIP TO:

DART AEROSPACE LTD
1270 ABERDEEN STREET
HAWKESBURY , ON
K6A 1K7
MTR:Y

INVOICE DATE:	10/26/09
ORDER DATE:	10/22/09
SHIP DATE:	10/26/09
ORDER NUMBER:	W020270
PURCHASE ORDER:	PO10312

Currency	Sales Person	Ship Via	F.O.B.	Terms
CANADIAN DOLLARS	ERYCK BLAIS	NIR:R-557065-1	PREPAID	NET 30 DAYS

Ln	Back Ordered	Ordered	Unit	Description	Shipped	Price Per	Value
		2	PC	ALUMINUM FLATS AFL 6061 T6 3/16" x 4" x R/L L030769 20' 2 PC/36 LB MUST USE HT# 09040131A	2 UN	35.00	70.00

10/27/09 11:42:29

Merchandise:	70.00
Surcharges:	
No Tax Costs:	
GST	3
Total Due:	

Title to the goods sent out on this invoice remains with Magna Stainless Div of CSM ULC until such time as this invoice has been paid in full. Unless otherwise noted terms are 30 days. Interest accrues on all overdue accounts at the rate of 1.5% per month compounded monthly.

Q.S.T. # 1213236471
G.S.T. # 881565899 RT0001

Purchase Order Receipt Listing

October 26, 2009 12:00:23 PM

All amounts are calculated in domestic currency.

All Vendors PO ID PO10312 Receipt Dates from 10/26/2009 to 10/26/2009 All Line Item Types
All Item ID/GL/WOs All Rec. Employees All Currencies
Grouped by Vendor ID

Purchase Order ID/ Curr Type	Line Nbr/ Insp Req	Project ID	Reference/ Description/ Cert Std	PO U/M / Stock U/M	Required Date Required Qty	Recv Date/ Recv Emp	Recv Qty (PO U/M)	Cost Per Unit/ Recv Value	Inspected Qty/ Rejected Qty (PO U/M)	MRB Qty/ MRB Reject Qty	Book Amt
VendorID\Vendor Name			**VC-MAG002**	**Magna Stainless**							
PO10312	3		M6061T6B0.187X04. 000	f	9/4/2009	10/26/2009	40.0000	$1.75	0.0000	0	$70.00
CAD	No		6061-T6 Bar .178 x 4.00	f	40.0000	Stores		$70.00	0.0000	0	

Th 112995

Total Received Quantity:	40.0000
Total Qty to Inspect (PO U/M):	0.0000
Total Reject Quantity:	0.0000
Total Receipt Value:	$70.00
Total Balance Due Quantity:	0.0000

MAG A

Magna Stainless
5775 Kieran St, Saint-Laurent, Quebec H4S 0A3
Phone: (514) 339-1211 Watts: 1-800-363-6646 Fax: (514) 339-1105

PACKING LIST

I018465

SOLD TO:
DART AEROSPACE LTD
1270 ABERDEEN STREET

HAWKESBURY , ON
K6A 1K7
Contact: CHANTAL

SHIP TO:
DART AEROSPACE LTD
1270 ABERDEEN STREET

HAWKESBURY , ON
K6A 1K7
Ship Terms: PREPAID MTR:Y

SPECIAL INSTRUCTIONS

Currency	Sales Person	Customer Phone	Customer Fax	Customer PO
CANADIAN DOLLARS	ERYCK BLAIS	(613) 632-5200	(613) 632-1053	PO10312

Sales Order	Terms	Ship Via	Date Ordered	Date Required	Date Shipped
W020270	NET 30 DAYS	NIR:R-557065-1	10/22/09	10/26/09	10/26/09

Ordered	Back Ordered	Unit	Description	Bundle #	Heat #	Shipped
2		PC	ALUMINUM FLATS AFL 6061 T6 3/16" x 4" x R/L 20' 36 LB / 2 PC MUST USE HT# 09040131A	L030769	09040131A	2 2
Bundles: 1				Approx	Weight:	36 LB

Received by:_____ Date:_____ Signature:_____

Dart Aerospace Ltd.
1270 Aberdeen Street
Hawkesbury, ON K6A 1K7
Tel: 613 632 9577

OUTSTANDING PO REPRINT

Purchase Order ID PO10312
Purchase Order Date 9/01/09
PO Print Date 9/11/09

VC-MAG002

Order From :
MAGNA STAINLESS
5775 RUE KIERAN
ST LAURENT, QC H4S 0A3
CA

Contact Name		**Buyer**	Chantal Lavoie
Vendor Phone	800 363 6646	**Requisition Nbr**	
Vendor Fax	514 339 1105	**Tax Resale Nbr**	10127-2607
Vendor Account Nbr		**Terms**	Net 30
		Currency	CAD
		FOB	

Line Nbr	Reference / Revision ID / Vendor Part Number	Description/ Mfg ID	Req Date/ Taxable	Req Qty	Unit Price	Extended Price

Ship To : DART AEROSPACE LTD 1270 ABERDEEN
HAWKESBURY, ON K6A 1K7
CANADA

Line Nbr	Reference / Revision ID / Vendor Part Number	Description/ Mfg ID	Req Date/ Taxable	Req. Qty/ Unit of Measure	Ship Method	Unit Price	Extended Price
3	M6061T6B0.187X04.000	6061-T6 Bar .178 x 4.00	9/04/09 Yes	✓ 40.00 f	Yours ppd	$1.7500	$70.00
		Special Inst:	AS ABOVE		**Line Total:**		**$70.00**
8	M6061T6R0.625	6061-T6 Round Bar .625"	9/04/09 Yes	40.00 f	Yours ppd	$0.8125	$32.50
		Special Inst:	MATERIAL: 6061-T6 OR 6061-T651/T6510/T6511/T62 ROUND BAR PER AM-QQ-A-225/8 OR AMS 4117/4128/4115/4116 OR5 PER AMS-QQ-A-200/8 OR AMS 4160		**Line Total:**		**$32.50**

Rec 9/10/26

REFERENCE ONLY

Dart Aerospace Ltd.
1270 Aberdeen Street
Hawkesbury, ON K6A 1K7
Tel: 613 632 9577

OUTSTANDING PO REPRINT

Purchase Order ID PO10312
Purchase Order Date 9/01/09
PO Print Date 9/11/09

Order From : VC-MAG002

MAGNA STAINLESS
5775 RUE KIERAN
ST LAURENT, QC H4S 0A3
CA

Contact Name		**Buyer**	Chantal Lavoie
Vendor Phone	800 363 6646	**Requisition Nbr**	
Vendor Fax	514 339 1105	**Tax Resale Nbr**	10127-2607
Vendor Account Nbr		**Terms**	Net 30
		Currency	CAD
		FOB	

Line Nbr	Reference / Revision ID / Vendor Part Number	Description/ Mfg ID	Req Date/ Taxable	Req Qty	Unit Price	Extended Price
15	M304S12GA	304/316 0.100" Sheet	9/08/09 Yes	64.00 sf	Yours ppd $9.2188	$590.00

Special Inst: MATERIAL: AISI 304/316 SS SHEET ANNEALED 2B FINISH
SPEC'S: MIL-S-5059 OR AMS 5513/AMS5524/ASTM A240 OR ASME SA240

Line Total: $590.00

Outstanding PO Total: $692.50

MATERIAL CERTIFICATION REQ'D UPON DELIVERY

REFERENCE ONLY

CZ

No substitution or deviation without consent.
Certificate of Conformity or Material Certification required when applicable

Change Nbr: 2 **Change Date:** 9/11/09

CAN ART
ALUMINUM EXTRUSION INC.

78927

Material Test Report

Customer Ship To:

ASA Alloys Inc.
81 Steinway Blvd.

Etobicoke
ON M9W 6H6

09/10/26

Our Order:	829867 - 1
Your PO #	78553-RK
Part #	05514-000-240
Die:	LS05514
Description:	.188 x 4.000
Alloy Temper	6061 T6511
Print Date:	4/29/2009

Chemical Properties

Si	Fe	Cu	Mn	Mg	Cr	Zn	Ti	others each	others total	Al
0.40-0.8	0.7 max	0.15-.40	0.15 max	0.8-1.2	0.04-0.35	0.25 max	0.15	0.05	0.15	remain

Mechanical Properties

Test ID	Test Date	CastNum	Strength ksi Ultimate	Strength ksi Yield (2% Offset)	Elongation (2" gage length)
232355(	4/20/09	09040131A	43.40	40.23	14.3

Applicable Specifications: ASTM B221-08 ASTM B308-02 ASTM B429 QQA200/8 QQA200/16

Can Art Aluminum Extrusion Inc. certifies that materials shipped under this order have been inspected and tested in accordance with Aluminum Association and agreed upon customer specifications. Can Art assumes no liability for additional costs which may be incurred during the customer's manufacture and sale of its products, and is subject only to the replacement of any materials not within agreed upon specifications provided written notification is received by Can Art within 30 days from the date of shipment.

Eric Hotte - Tensile Testing
Authorized

Evan Eng, Quality Assurance Mgr.

P0065071 - 09040131A

Dart Aerospace Ltd.
1270 Aberdeen Street
Hawkesbury, ON K6A 1K7
Tel: 613 632 9577
Fax: 613 632 1053

PURCHASE ORDER

Purchase Order ID PO10312

Purchase Order Date 9/01/09
PO Print Date 9/01/09

Order From :

MAGNA STAINLESS
5775 RUE KIERAN
ST LAURENT, QC H4S 0A3
CA

VC-MAG002

FAXED

Contact Name		**Buyer**	Chantal Lavoie
Vendor Phone	800 363 6646	**Requisition Nbr**	
Vendor Fax	514 339 1105	**Tax Resale Nbr**	10127-2607
Vendor Account Nbr		**Terms**	Net 30
		Currency	CAD
		FOB	

Ship To : DART AEROSPACE LTD 1270 ABERDEEN
HAWKESBURY, ON K6A 1K7
CANADA

Line Nbr	Reference / Revision ID / Vendor Part Number	Description/ Mfg ID	Req Date/ Taxable	Req Qty/ Unit of Measure	Ship Method	Unit Price	Extende Pric
1	M6061T6B0.750X06.000	6061T6 BAR .750 X 6.00	9/04/09 Yes	60.00 f	Yours ppd	$10.7500	$645.
		Special Inst:	MATERIAL: 6061-T6 OR 6061-T651/T6510/T6511/T62 BAR PER AMS-QQ-A-225/8 OR AMS 4117/4128/4115/4116 OR PER AMS-QQ-A-200/8 OR AMS 4160				
2	M6061T6B0.750X01.000	6061-T6 Bar .750 x 1.00	9/04/09 Yes	New 40 24.00 f	Yours ppd	$3.0000	$72.0
		Special Inst:	AS ABOVE				
3	M6061T6B0.187X04.000	6061-T6 Bar .178 X 4.00	9/04/09 Yes	40.00 f	Yours ppd	$1.7500	$70.0(
		Special Inst:	AS ABOVE				
4	M6061T6B0.750X00.750	6061-T6 Bar .750 x .750	9/04/09 Yes	40.00 f	Yours ppd	$1.3500	$54.00

MATERIAL CERTIFICATION REQ'D UPON DELIVERY

No substitution or deviation without consent.
Certificate of Conformity or Material Certification required when applicable

Change Nbr: 1 **Change Date:** 9/01/09

TRANSMISSION VERIFICATION REPORT

TIME : 10/30/2009 10:56
NAME : DART
FAX : 613-632-5246
TEL : 613-632-5200
SER.# : M7J215798

DATE,TIME	10/30 10:55
FAX NO./NAME	EAGLE
DURATION	00:01:06
PAGE(S)	05
RESULT	OK
MODE	STANDARD ECM

w/o 65497

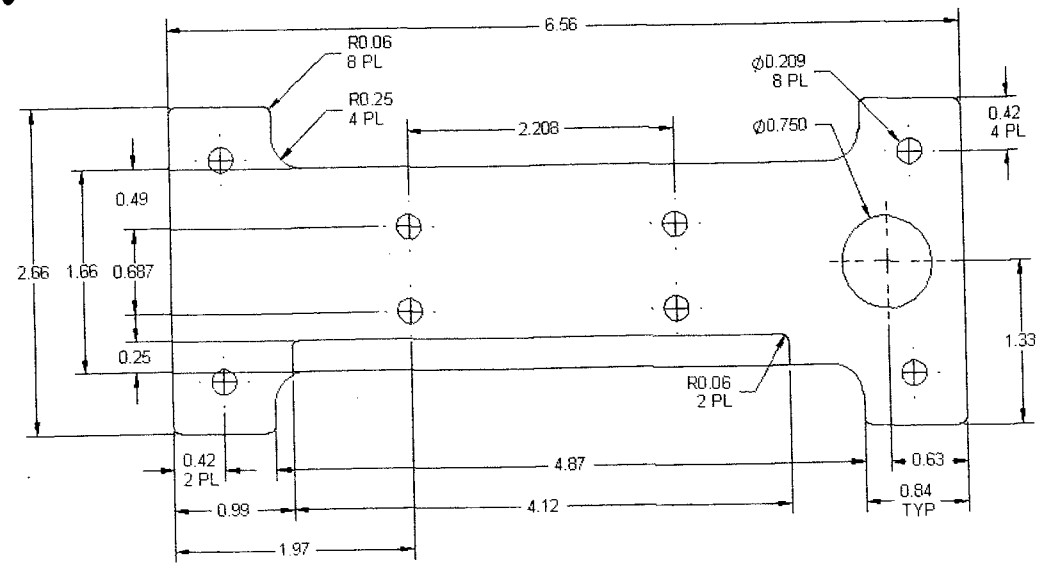

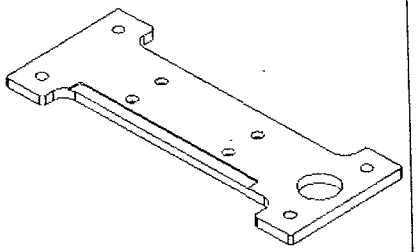

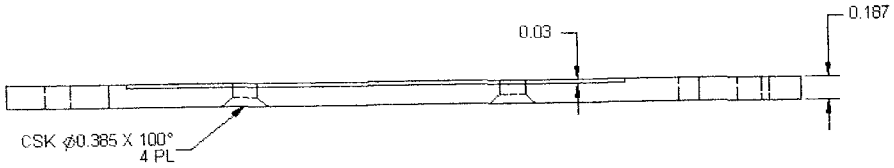

D4184-5 MAIN CASE BASE

PRELIMINARY ISSUE

10.11.12

NOTES:
1) MATERIAL: 6061-T6/T651/T6510/T6511/T62 ALUMINUM BAR
PER QQ-A-225/8 OR AMS-QQ-A-225/8 (OR AMS 4117/4128/4115/4116)
OR QQ-A-200/8 OR AMS-QQ-A-200/8 (OR AMS 4160)
OR ASTM B211 OR ASTM B221
REF DART SPEC M6061T6B
2) FINISH: CHEMICAL CONVERSION COAT PER DART QSI 005 4.1
3) TOLERANCES: PER DART QSI 018 UNLESS OTHERWISE NOTED
4) UNITS: INCHES UNLESS OTHERWISE NOTED
5) BREAK SHARP EDGES: 0.005 TO 0.010 MAX
6) IDENTIFICATION: N/A
7) WEIGHT: 0.21 lbs

DESIGN		DART AEROSPACE LTD HAWKESBURY, ONTARIO, CANADA
DRAWN		
CHECKED		DRAWING NO. D4184 — REV. PA8 — SHEET 5 OF 7
MFG. APPR.		
APPROVED		TITLE: MAIN CASE — SCALE: NTS
DE APPR.		
DATE 10.11.12		

COPYRIGHT © 2010 BY DART AEROSPACE LTD
THIS DOCUMENT IS PROPRIETARY AND CONFIDENTIAL AND IS SUPPLIED ON THE EXPRESS CONDITION THAT ITS NOT TO BE USED FOR ANY PURPOSE OR COPIED OR COMMUNICATED TO ANY OTHER PERSON WITHOUT WRITTEN PERMISSION FROM DART AEROSPACE LTD.